Sink Model Specification: ESUF1831-9

Hand Fabricated, Standard Under Mount Sinks, 18 Gauge, 10mm Radius

Description:

- 18 gauge, 18-10 stainless steel, type 304
- **Bowl size** - 16 x 29, 9" deep (41 x 74, 23 cm deep)
- **Overall size** - 18 x 29, 9" deep (45 x 70, 23 cm deep)
- 10 mm radius corners
- Rear drain location
- Creased lines on bottom to improve drainage
- Satin bowl and ledge

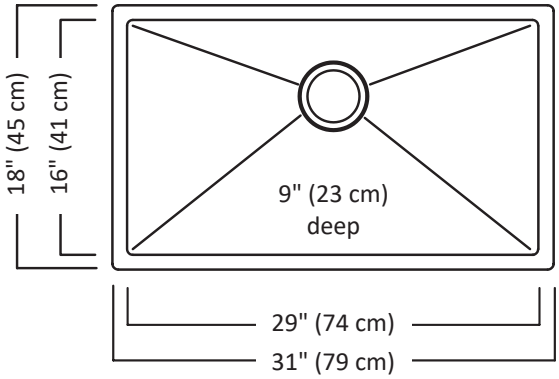

Recommended minimum cabinet width:

- 33"

Inclusions:

- Basket strainer: EA-114
- Undercoating and sound deadening pads
- Template
- Installation clips
- All sinks individually boxed

Optional Accessories:

- Stainless steel bottom grid with rubber feet: **EBGF1629**
- Stainless steel countertop roll mat with silicone wrapped bars: **ERM1814**
- Hardwood countertop cutting board: **ECB1810**
- **Reference document available:** *Excalibur Sink Cross Reference to Accessories*

ECB1810
Countertop
Cutting Board

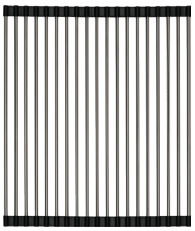

ERM1814
Countertop
Roll Mat

Certifications:

- Sinks CUPC certified by IAPMO, strainers certified by CSA

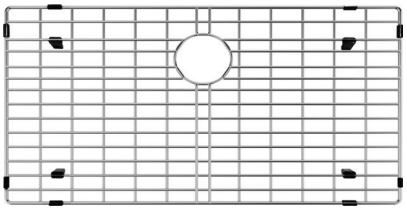

EBGF1629
Bottom Grid